1848261
VINTAGE NESTING TABLE

PARTS AND HARDWARE LIST

A.	Large Table Top Assembly (Labeled “A”)	1pc
B.	Medium Table Top Assembly (Labeled “B”)	1pc
C.	Small Table Top Assembly	1pc
D.	Large Table Legs (Labeled “A”)	4pcs
E.	Medium Table Legs (Labeled “B”)	4pcs
F.	Small Table Legs	4pcs
G.	Allen Head Bolts	12pcs
H.	Lock Washers	12pcs
I.	Flat Washers	12pcs
J.	Allen Wrench	1pc

* Please make sure that you have all the parts indicated above before you begin assembly of this item.
* Use the hardware illustrations to determine correct piece and size.
* This item should be assembled on a soft flat surface to prevent scratching the finish during assembly.
* This item may require periodic tightening.

HARDWARE ILLUSTRATIONS

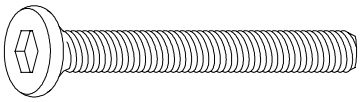

G. Allen Head Bolt

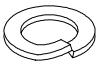

H. Lock Washer

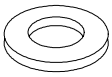

I. Flat Washer

1848261
VINTAGE NESTING TABLE

Attach Legs

Parts required

A.	Large Table Top Assembly (Labeled "A")	1 pc	H.	Lock washers	4 pcs
D.	Large Table Legs (Labeled "A")	4 pcs	I.	Flat Washers	4 pcs
G.	Allen Head Bolts	4 pcs	J.	Allen Head Wrench	1 pc

1. Place Large Tabletop Assembly (Labeled "A") (A) up side down.
2. Align the pre-drilled hole in the Large Table Legs (Labeled with "A") (D) with the pre-drilled hole in the corner block and secure with the Allen Head Bolt (G), Lock Washer (H), Flat Washer (I) using the Allen Wrench (J). See Illustration #1.
3. Repeat Steps 1 and 2 to assemble the Medium Tabletop Assembly (Labeled "B") (B) and Small Tabletop Assembly (C).

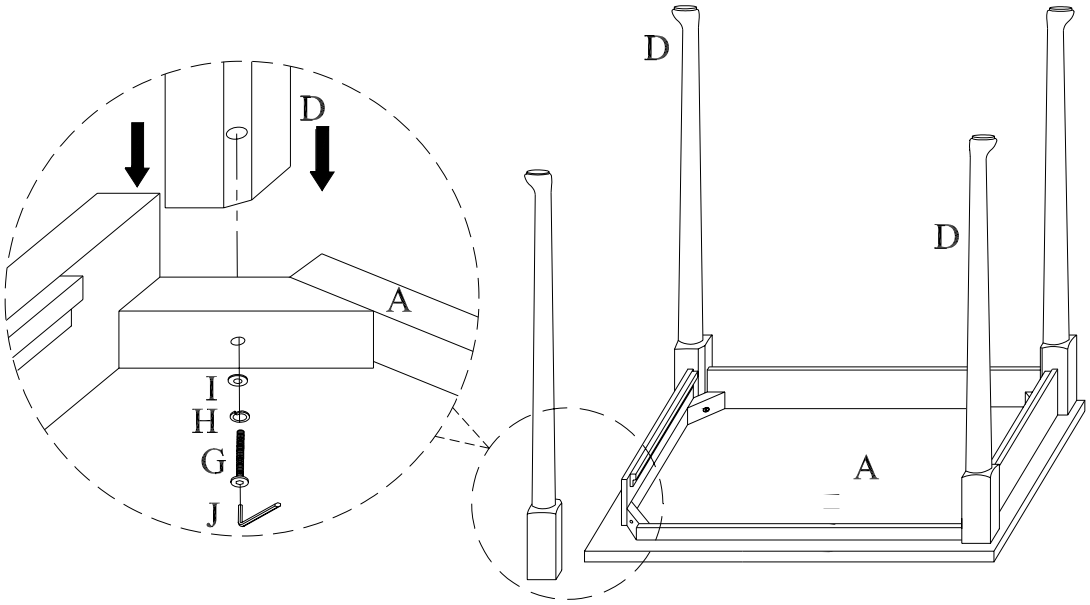

Illustration #1

1848261
VINTAGE NESTING TABLE

Place the Assembled Tables together

4. Carefully slide the Medium Table (Labeled “B”) (B) under the Large Tabletop Assembly (Labeled “A”) (A). See Illustration #2
5. Carefully slide the Small Table (C) under the Medium Table (Labeled “B”) (B).See Illustration #2

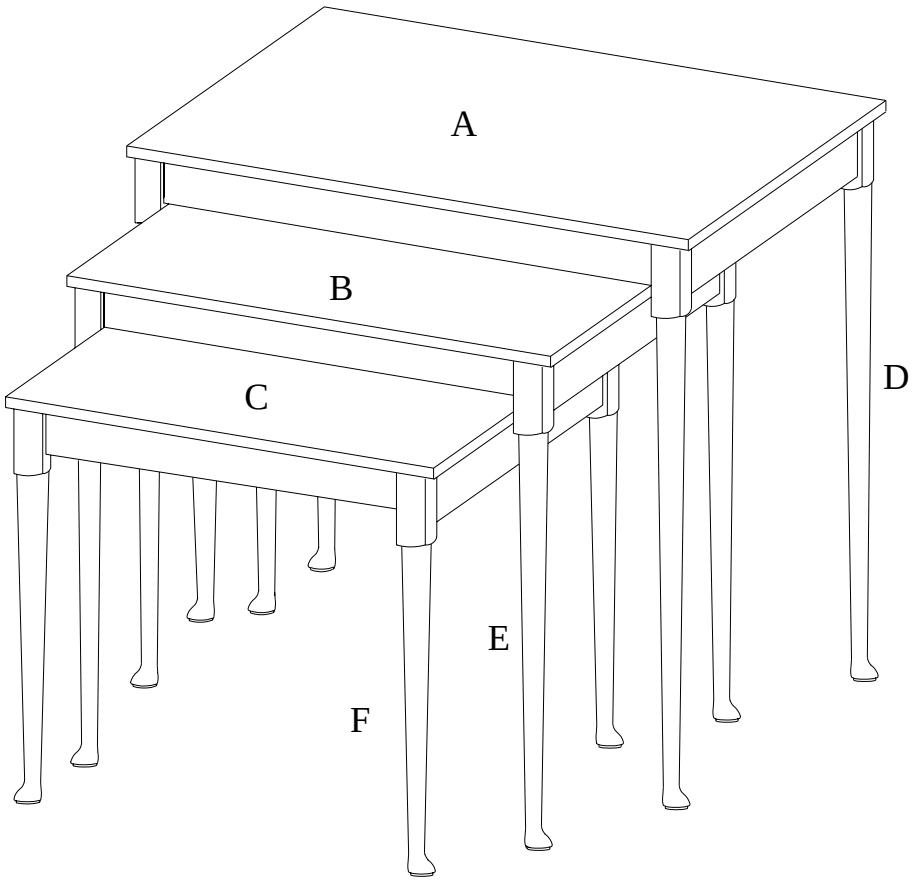

Illustration #2